Wake Frequency Calculations Data Sheet

Please fill out as many of the specifications as possible.

Customer	
Reference No.	
PROCESS PROPERTIES	
Process Fluid (Phase)	
Max Pressure (psig, kPag)	
Max Temperature (°F, °C)	
Velocity (ft/s, m/s)	
Fluid Density (kg/cm^3, lb/ft^3, lb/in^3)	
Fluid Viscosity (cP)	
SAMPLING PROBE PROPERTIES	
Connection Type	
Sampling Probe Material	
(L0) Shielded Length (in, mm)	
(U) Unsupported Length (in, mm)	
(A) Root Diameter (in, mm)	
(d) Probe ID (in, mm)	

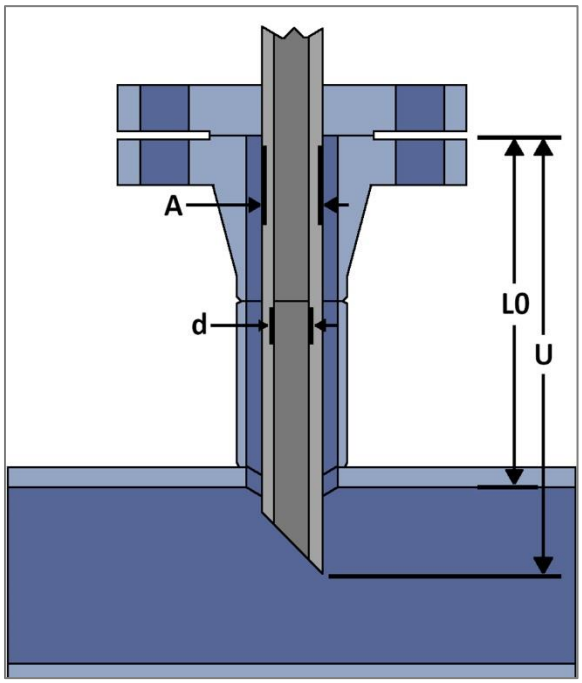

SKETCH **SAMPLING PROBE** HERE

281-902-3924
SENSOReng.com

Form 1821 (03.20) ©SENSOR is owned and operated by SOR Controls Group